OCF52-3

MEDIUM VOLTAGE OUTDOOR CURRENT TRANSFORMER



GENERAL FEATURES

Dry insulated current transformer for outdoor application. Its aluminium baseplate and cycloaliphatic resin gives great mechanical and electrical performances in aggressive and polluted environments.

- ✓ **Standard :** IEC 61869-2 | CSA C61869-2 | IEEE C57-13
- ✓ **Creepage :** 1500mm
- ✓ **Flashover :** 565mm
- ✓ **Ambient temperature :** up to -50/+50°C

ELECTRICAL FEATURES

- ✓ **Insulation level :** up to 52/95/250kV
- ✓ **Frequency :** 50Hz | 60Hz
- ✓ **Primary current (In) :** up to 3200A
- ✓ **Rated short-time thermal current (Ith) :** up to 60kA 1s
- ✓ **Rated dynamic current (Idyn) :** up to 2.5 * Ith
- ✓ **Number of cores :** 1 to 2
- ✓ **Double ratio :** by secondary tap or by primary coupling
- ✓ **Accuracy class (IEC) :** 0.1 | 0.2 | 0.2S | 0.5 | 0.5S | 1 | 3 | 5 | 5P | 10P | 5PR | 10PR | PX
- ✓ **Accuracy class (CSA) :** 0.15 | 0.15S | 0.3 | 0.6 | 1.2 | 2.5L ..| 10L..
- ✓ **Accuracy class (IEEE) :** 0.15 | 0.3 | 0.6 | 1.2 | C..

MECHANICAL FEATURES

- ✓ **Approximate weight :** 80kg
- ✓ **Cable outlet :** PG21 polyamide cable gland for Ø 10 to 18mm
- ✓ **Primary connection :** to be defined according specification

OPTIONS

- ✓ **Cable outlet :** 1'' NPT adaptator or PG21 nickel-plated brass cable gland for Ø 13 to 19mm
- ✓ **Extented creepage :** 1700mm (OCF64-3)

DIMENSIONS

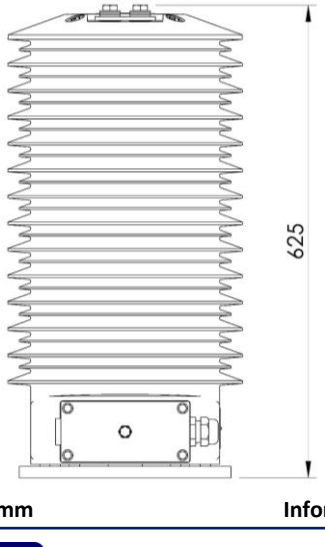

Dimensions in mm

Information given for illustrative purposes. For any other features or need, contact us.

SADTEM

INSTRUMENT TRANSFORMERS

671, Rue Maurice Caullery - ZI Douai Dorignies – 59506 DOUAI cedex – France

Phone : (33) 03 59 61 15 60 www.sadtem.com contact@sadtem.com

FTP030_GB Rev : 00/07-21