SW460

MEDIUM VOLTAGE INDOOR CURRENT TRANSFORMER

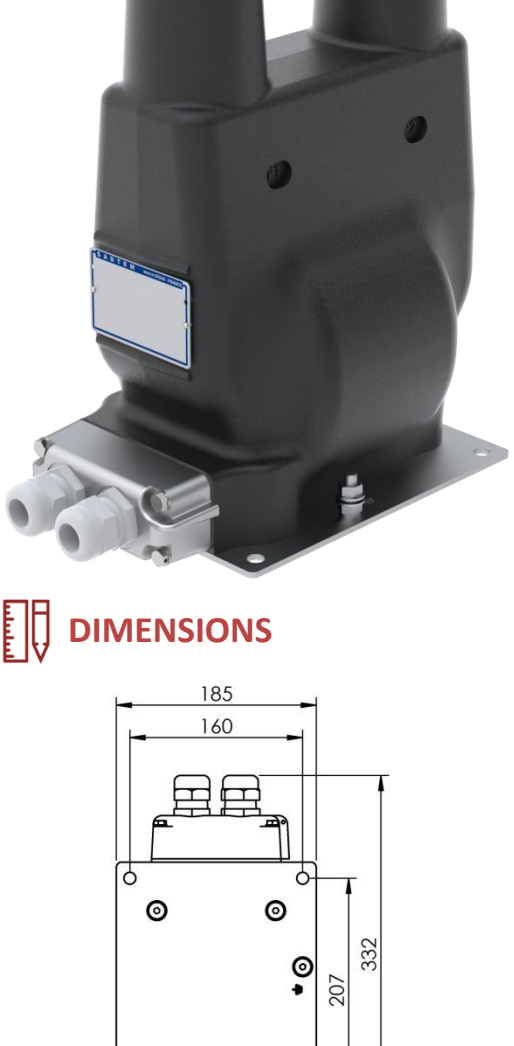

GENERAL FEATURES

Indoor compact dry type current transformer, temporarily submersible and completely earthed.

- ✓ **Standard :** IEC 61869-2
- ✓ **Ambient temperature :** up to -25/+40°C
- ✓ **Protection Class:** IP27 (30 minutes – 2 meters water)
- ✓ **Primary connection:** Custom made ABB interface
- ✓ **ENEDIS qualified:** authorization N° …

ELECTRICAL FEATURES

- ✓ **Insulation level :** 24/50/125kV
- ✓ **Frequency :** 50Hz
- ✓ **Primary current (In) :** up to 600A
- ✓ **Rated short-time thermal current (Ith) :** 12.5kA 1s
- ✓ **Rated dynamic current (Idyn) :** 2.5 * Ith
- ✓ **Number of cores :** 2
- ✓ **Double ratio :** by secondary tap
- ✓ **Burden and accuracy class :** 7.5VACL0.2S FS10 (core 1) – 5VACL5P30 (core 2)

DIMENSIONS

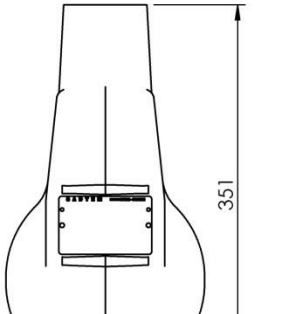

MECHANICAL FEATURES

- ✓ **Approximate weight :** 25kg
- ✓ **Cable outlet :** PG21 polyamide cable gland for Ø 13 to 18mm
- ✓ **Earth connection**

Dimensions in mm

Information given for illustrative purposes. For any other feature or need, contact us.

SADTEM

INSTRUMENT TRANSFORMERS

671, Rue Maurice Caullery - ZI Douai Dorignies – 59506 DOUAI cedex – France

Phone : (33) 03 59 61 15 60 www.sadtem.com contact@sadtem.com

FTP021_GB Rev : 00/07-21