SW47

MEDIUM VOLTAGE INDOOR CURRENT TRANSFORMER

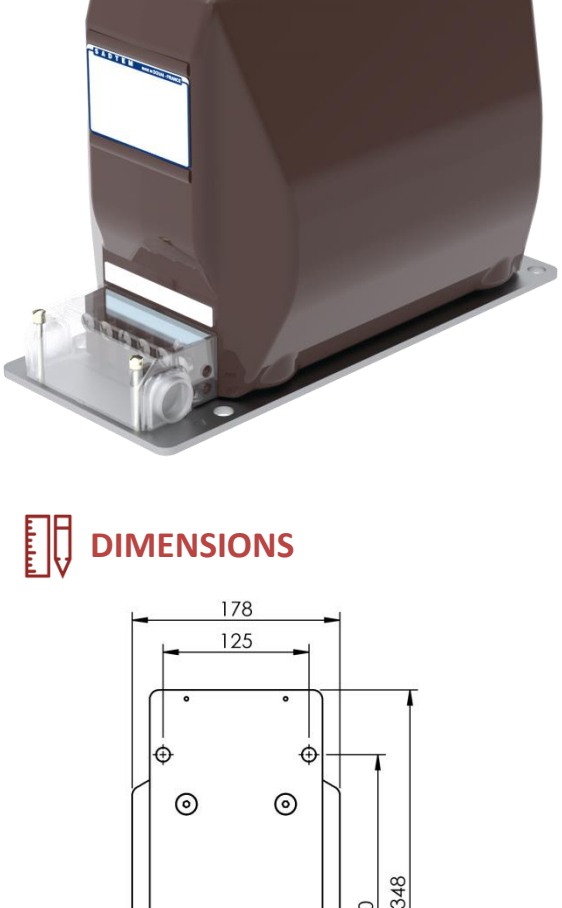

GENERAL FEATURES

Indoor dry type current transformer.

- ✓ **Standards :** IEC 61869-2 | CSA C61869-2 | IEEE C57-13
- ✓ **Ambient temperature :** up to -25/+40°C
- ✓ **CSA qualified:** authorization LR 109295

ELECTRICAL FEATURES

- ✓ **Insulation level :** up to 27.5/50/125kV
- ✓ **Frequency :** 50Hz | 60Hz
- ✓ **Primary current (In) :** up to 3000A
- ✓ **Rated short-time thermal current (Ith) :** up to 80kA 1s
- ✓ **Rated dynamic current (Idyn) :** up to 2.5 * Ith
- ✓ **Number of cores :** 1 to 3
- ✓ **Double ratio :** by secondary tap or by primary coupling
- ✓ **Accuracy class (IEC) :** 0.1 | 0.2 | 0.2S | 0.5 | 0.5S | 1 | 3 | 5 | 5P | 10P | PX
- ✓ **Accuracy class (CSA) :** 0.15 | 0.15S | 0.3 | 0.6 | 1.2 | 2.5L ..| 10L..
- ✓ **Accuracy class (IEEE) :** 0.15 | 0.3 | 0.6 | 1.2 | C..

MECHANICAL FEATURES

- ✓ **Approximate weight :** 31kg
- ✓ **Cable outlet :** PG16
- ✓ **With sealable cover**

OPTIONS

- ✓ **Short base without cover**
- ✓ **Without primary studs**

DIMENSIONS

Dimensions in mm

Information given for illustrative purposes. For any other feature or need, contact us.

SADTEM
INSTRUMENT TRANSFORMERS
671, Rue Maurice Caullery - ZI Douai Dorignies – 59506 DOUAI cedex – France
Phone : (33) 03 59 61 15 60 www.sadtem.com contact@sadtem.com

FTP016_GB Rev : 00/07-21