B02

LOW VOLTAGE OUTDOOR CURRENT TRANSFORMER

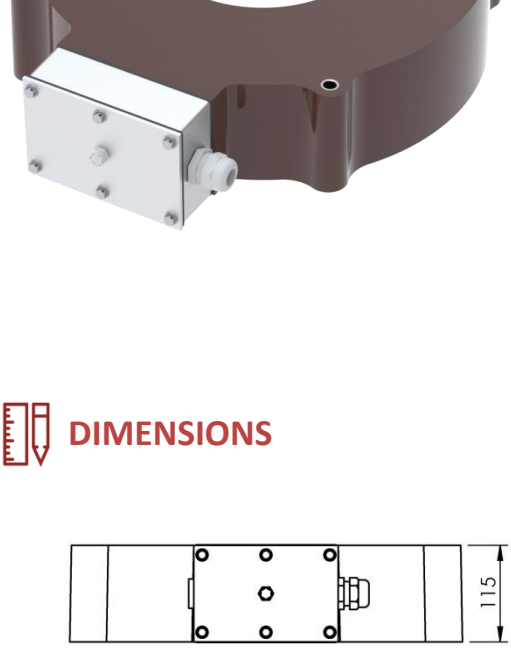

GENERAL FEATURES

Low voltage dry type current transformer for wires or bars passage. Its design makes it particularly adapted for the assembly around the bushing of power transformers.

- ✓ **Standard :** IEC 61869-2 | CSA C61869-2 | IEEE C57-13
- ✓ **Available diameters (Ød) :** 220mm | 270mm | 280mm | 310mm | 325mm
- ✓ **Ambient temperature :** up to -25/+40°C

ELECTRICAL FEATURES

- ✓ **Insulation level :** up to 1.2/6kV
- ✓ **Frequency :** 50Hz | 60Hz
- ✓ **Primary current (In) :** up to 3000A
- ✓ **Rated short-time thermal current (Ith) :** up to 200*In 1s
- ✓ **Rated dynamic current (Idyn) :** up to 2.5 * Ith
- ✓ **Number of cores :** 1 to 2
- ✓ **Double ratio :** by secondary tap
- ✓ **Accuracy class (IEC) :** 0.1 | 0.2 | 0.2S | 0.5 | 0.5S | 1 | 3 | 5 | 5P | 10P | 5PR | 10PR | PX
- ✓ **Accuracy class (CSA) :** 0.15 | 0.15S | 0.3 | 0.6 | 1.2 | 2.5L ..| 10L..
- ✓ **Accuracy class (IEEE) :** 0.15 | 0.3 | 0.6 | 1.2 | C..

DIMENSIONS

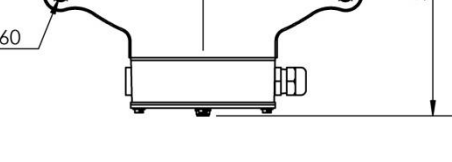



MECHANICAL FEATURES

- ✓ **Approximate weight :** from 30 to 65kg
- ✓ **Cable outlet :** PG 21 polyamide cable gland for Ø 10 to 18mm

OPTIONS

- ✓ **Cable outlet :** 1'' NPT adaptor or PG21 nickel-plated brass cable gland for Ø 13 to 19mm

Dimensions in mm

Information given for illustrative purposes. For any other feature or need, contact us.

SADTEM

INSTRUMENT TRANSFORMERS
671, Rue Maurice Caullery - ZI Douai Dorignies – 59506 DOUAI cedex – France
Phone : (33) 03 59 61 15 60 www.sadtem.com contact@sadtem.com

FTP009_GB Rev : 00/05-21