B10

LOW VOLTAGE OUTDOOR CURRENT TRANSFORMER

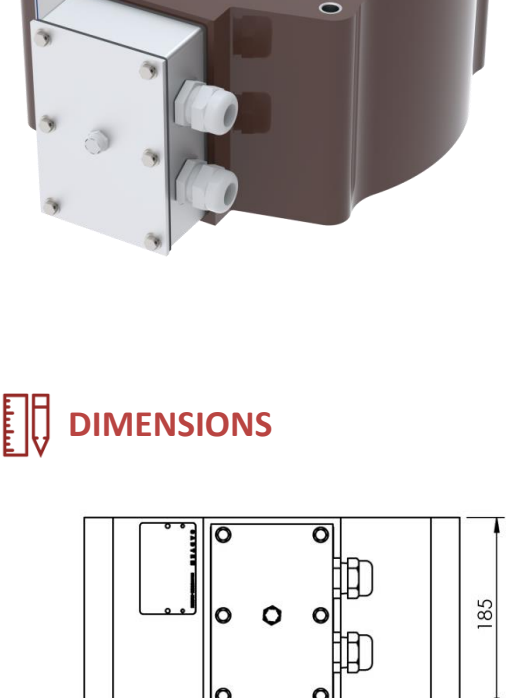

GENERAL FEATURES

Low voltage dry type current transformer for wires or bars passage.

- ✓ **Standard :** IEC 61869-2 | CSA C61869-2 | IEEE C57-13
- ✓ **Available diameters (Ød) :** 125mm | 140mm | 150mm | 170mm | 190mm
- ✓ **Ambient temperature :** up to -25/+40°C

ELECTRICAL FEATURES

- ✓ **Insulation level :** up to 1.2/6kV
- ✓ **Frequency :** 50Hz | 60Hz
- ✓ **Primary current (In) :** up to 3000A
- ✓ **Rated short-time thermal current (Ith) :** up to 200*In 1s
- ✓ **Rated dynamic current (Idyn) :** up to 2.5 * Ith
- ✓ **Number of cores :** 1 to 3
- ✓ **Double ratio :** by secondary tap
- ✓ **Accuracy class (IEC) :** 0.1 | 0.2 | 0.2S | 0.5 | 0.5S | 1 | 3 | 5 | 5P | 10P | 5PR | 10PR | PX
- ✓ **Accuracy class (CSA) :** 0.15 | 0.15S | 0.3 | 0.6 | 1.2 | 2.5L ..| 10L..
- ✓ **Accuracy class (IEEE) :** 0.15 | 0.3 | 0.6 | 1.2 | C..

DIMENSIONS

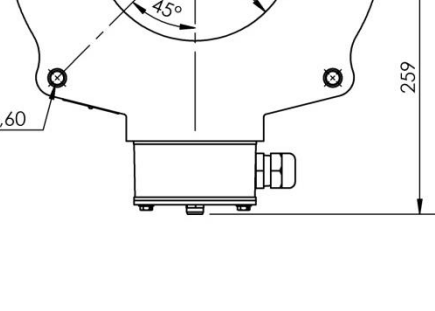

MECHANICAL FEATURES

- ✓ **Approximate weight :** from 40 to 80kg
- ✓ **Cable outlet :** PG 21 polyamide cable gland for Ø 10 to 18mm

OPTIONS

- ✓ **Cable outlet :** 1'' NPT adaptor or PG21 nickel-plated brass cable gland for Ø 13 to 19mm
- ✓ **Mounting square brackets**

Dimensions in mm

Information given for illustrative purposes. For any other feature or need, contact us.

SADTEM

INSTRUMENT TRANSFORMERS
671, Rue Maurice Caullery - ZI Douai Dorignies – 59506 DOUAI cedex – France
Phone : (33) 03 59 61 15 60 www.sadtem.com contact@sadtem.com

FTP008_GB Rev : 00/05-21