RV15

MEDIUM VOLTAGE INDOOR VOLTAGE TRANSFORMER

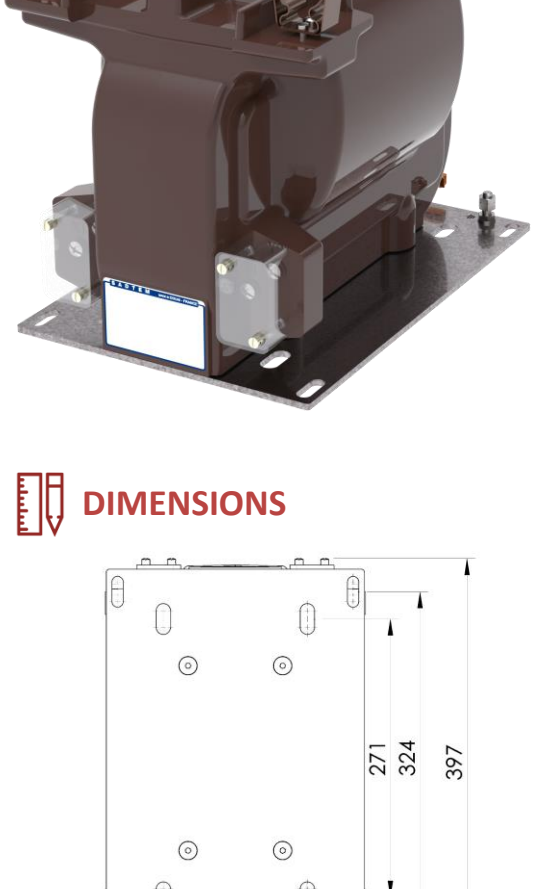

GENERAL FEATURES

Two HV poles voltage transformer and dry insulated for indoor application with primary fuse clips.

- ✓ **Standards :** IEC 61869-3 | CSA C61869-3 | IEEE C57-13
- ✓ **Ambient temperature :** up to -25/+40°C
- ✓ **CSA qualified:** authorization LR 109295

ELECTRICAL FEATURES

- ✓ **Insulation level :** up to 15/36/110kV
- ✓ **Frequency :** 50Hz | 60Hz
- ✓ **Primary voltage (Un):** up to 15000V
- ✓ **Voltage factor :** up to 1.2Un Perm.
- ✓ **Accuracy class (IEC) :** 0.1 | 0.2 | 0.5 | 1 | 3 | 3P | 6P
- ✓ **Accuracy class (CSA) :** 0.15 | 0.3 | 0.6 | 1.2 | 3P | 6P
- ✓ **Accuracy class (IEEE) :** 0.15 | 0.3 | 0.6 | 1.2
- ✓ **Accuracy burden (IEC) :** up to 75VACL0.2-200VACL0.5-500VACL1
- ✓ **Accuracy burden (CSA/IEEE) :** up to 0.3WXYZ
- ✓ **Thermal burden :** up to 1750VA

DIMENSIONS

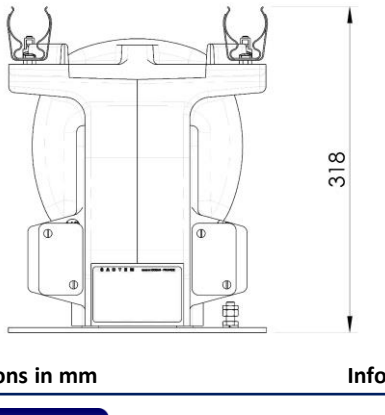

MECHANICAL FEATURES

- ✓ **Approximate weight :** 50kg
- ✓ **With sealable cover**

OPTIONS

- ✓ **Primary Fuse (0.5A or 1A)**

Dimensions in mm

Information given for illustrative purposes. For any other features or need, contact us.

SADTEM

INSTRUMENT TRANSFORMERS

671, Rue Maurice Caullery - ZI Douai Dorignies – 59506 DOUAI cedex – France

Phone : (33) 03 59 61 15 60 www.sadtem.com contact@sadtem.com

FTP049_GB Rev : 00/07-21