RY7

MEDIUM VOLTAGE INDOOR VOLTAGE TRANSFORMER

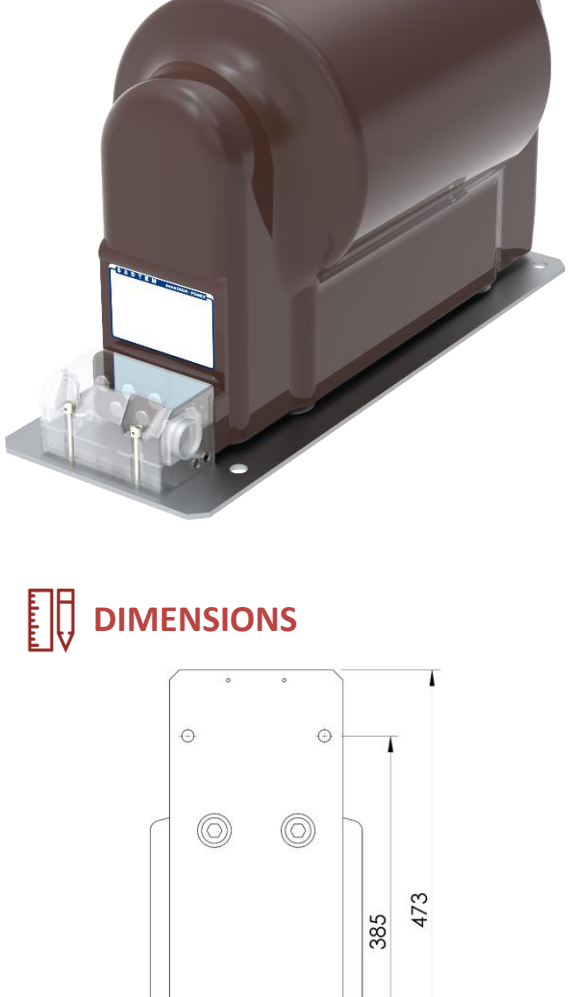

GENERAL FEATURES

One HV pole voltage transformer and dry insulated for indoor application.

- ✓ **Standards :** IEC 61869-3 | CSA C61869-3 | IEEE C57-13
- ✓ **Ambient temperature :** up to -25/+40°C
- ✓ **CSA qualified:** authorization LR 109295

ELECTRICAL FEATURES

- ✓ **Insulation level :** up to 40.5/85/170kV
- ✓ **Frequency :** 50Hz | 60Hz
- ✓ **Primary voltage (Un):** up to 36000/$\sqrt{3}$V
- ✓ **Voltage factor :** 1.5 or 1.9Un | 30s or 8H
- ✓ **Accuracy class (IEC) :** 0.1 | 0.2 | 0.5 | 1 | 3 | 3P | 6P
- ✓ **Accuracy class (CSA) :** 0.15 | 0.3 | 0.6 | 1.2 | 3P | 6P
- ✓ **Accuracy class (IEEE) :** 0.15 | 0.3 | 0.6 | 1.2
- ✓ **Accuracy burden (IEC) :** up to 100VACL0.2-400VACL0.5-900VACL1
- ✓ **Accuracy burden (CSA/IEEE) :** up to 0.15WX-0.3WXYZ
- ✓ **Residual winding :** on request
- ✓ **Thermal burden :** up to 1000VA

DIMENSIONS

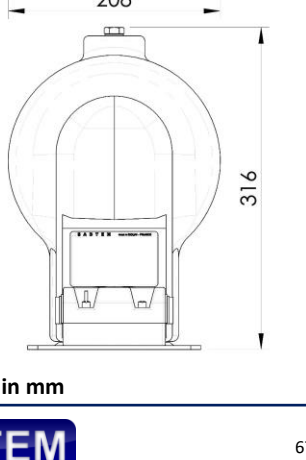

MECHANICAL FEATURES

- ✓ **Approximate weight :** 42kg
- ✓ **Cable outlet :** PG16
- ✓ **With sealable cover**

OPTIONS

- ✓ **High ambient temperature :** up to 80°C (RY7/HT)
- ✓ **Short base without cover**
- ✓ **H.V. fuse with holder**

Dimensions in mm

Information given for illustrative purposes. For any other features or need, contact us.

SADTEM

INSTRUMENT TRANSFORMERS

671, Rue Maurice Caullery - ZI Douai Dorignies – 59506 DOUAI cedex – France

Phone : (33) 03 59 61 15 60 www.sadtem.com contact@sadtem.com

FTP043_GB Rev : 00/07-21