Y24P

MEDIUM VOLTAGE INDOOR VOLTAGE TRANSFORMER

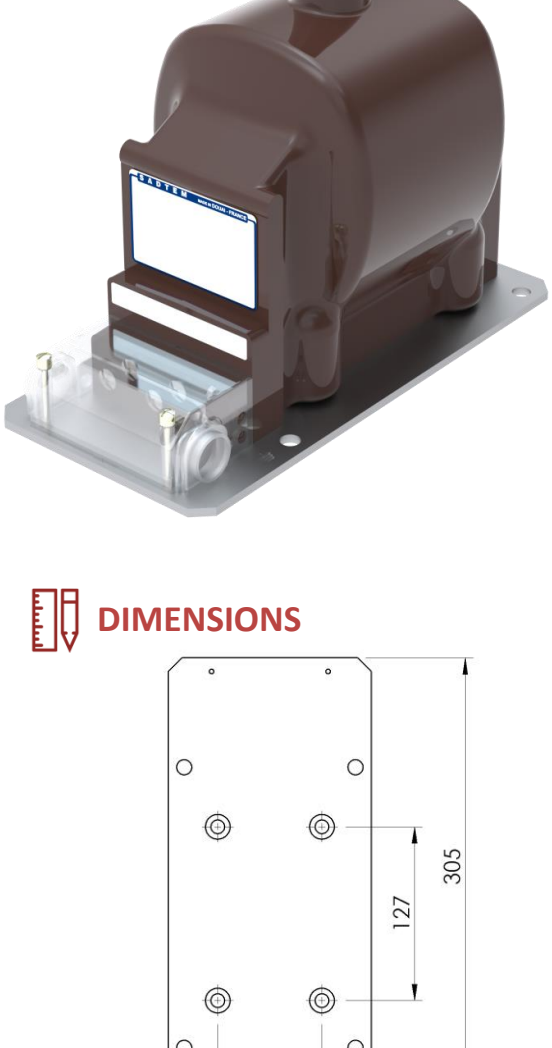

GENERAL FEATURES

One HV pole voltage transformer, compact and dry insulated for indoor application.

- ✓ **Standard :** IEC 61869-3
- ✓ **Ambient temperature :** up to -25/+40°C
- ✓ **ENEDIS qualified**

ELECTRICAL FEATURES

- ✓ **Insulation level :** up to 24/50/125kV
- ✓ **Frequency :** 50Hz | 60Hz
- ✓ **Primary voltage (Un):** up to 24000/√3V
- ✓ **Voltage factor :** 1.5 or 1.9Un | 30s or 8H
- ✓ **Accuracy class :** 0.1 | 0.2 | 0.5 | 1 | 3 | 3P | 6P
- ✓ **Accuracy burden :** up to 10VACL0.2-50VACL0.5-100VACL1
- ✓ **Residual winding :** on request
- ✓ **Thermal burden :** up to 250VA

DIMENSIONS

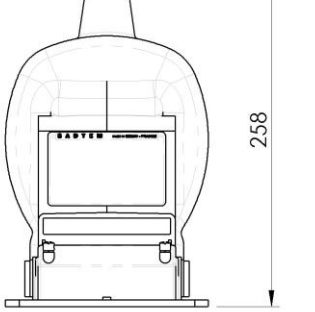

MECHANICAL FEATURES

- ✓ **Approximate weight :** 15kg
- ✓ **Cable outlet :** PG16
- ✓ **With sealable cover**

OPTIONS

- ✓ **Short base without cover**
- ✓ **H.V. fuse with holder**
- ✓ **Reduced height 230 mm (Y24PR)**

Dimensions in mm

Information given for illustrative purposes. For any other features or need, contact us.

SADTEM

INSTRUMENT TRANSFORMERS

671, Rue Maurice Caullery - ZI Douai Dorignies – 59506 DOUAI cedex – France

Phone : (33) 03 59 61 15 60 www.sadtem.com contact@sadtem.com

FTP036_GB Rev : 00/07-21